LIMITED COMPANY
AEROSPOOL PRIEVIDZA
Airfield Prievidza
971 03 PRIEVIDZA
Slovak Republic
Fax: +421 46 51 83 250
Tel.: +421 46 51 83 200
aerospool@aerospool.sk
www.aerospool.sk

FLIGHT MANUAL

FOR THE LIGHT SPORT AIRPLANE

WT9 Dynamic LSA Club S

MTOW 550kg

Type:	**WT9 Dynamic LSA**
Model:	**Club S**
Serial No:	**DY - 361/2010 LSA**
Registration:	LN-YKS
Date of Issue:	**01. 12. 2009**

Signature:

Authority:

Stamp:

Original date of approval:

This airplane is to be operated in compliance with information and limitations contained herein.

0.1. RECORD OF REVISION

Any revision of the present manual, except actual weight data, must be recorded in the following table and in case of approved Sections endorsed by the responsible airworthiness authority.
The new or amended text in the revised pages will be indicated by a black vertical line in the right hand margin, and the Revision No. and the date will be shown on the bottom left side of the page.

Rev. No.	Affected Section	Affected Pages	Date	Approval	Date	Date inserted	Signature
1	2, 3	2-1,2, 3-3	08.12.03			08.12.03	
2	3	3-2	22.09.04			22.09.04	
3	7	2,7,8,9,10	01.10.06			01.10.06	
4	2, 4, 5, 7	2-5,7,9, 4-1-3, 4-12, 5-4, 7-2, 7-11,12	15.01.07			15.01.07	
5	7	7-12	17.08.10			17.08.10	
5	1	1-4	21.02.07			21.02.07	
6	7	7-5	28.11.07			28.11.07	
7	0	1, 2	01.12.08	ZBWT9 10A/2008	- -	01.12.08	
7	3	5, 6	01.12.08	ZBWT9 10A/2008	- -	01.12.08	
8	0	1, 2	05.10.09	ZBWT9 11A/2009	- -	05.02.2010	
8	2	1, 3, 6	05.10.09	ZBWT9 11A/2009	- -	05.02.2010	
8	4	12	05.10.09	ZBWT9 11A/2009	- -	05.02.2010	
9	0	1, 2	30.05.11	ZBWT9 12A/2010	- -	12.08.2011	
9	8	3	30.05.11	ZBWT9 12A/2010	- -	12.08.2011	
10	0	1, 2	12.09.11	ZBWT9 14A/2011	- -	20092011	
10	1	2	12.09.11	ZBWT9 14A/2011	- -	"	
10	2	5, 7	12.09.11	ZBWT9 14A/2011	- -	"	
10	4	12, 13	12.09.11	ZBWT9 14A/2011	- -	"	
10	5	2, 3, 4, 5	12.09.11	ZBWT9 14A/2011	- -	"	

0.2 LIST OF EFFECTIVE PAGES

Section	Page	Date	Section	Page	Date
0	0-1	12.09.2011	5	„Appr“ 5-1	01.12.2001
	0-2	12.09.2011		„Appr“ 5-2	12.09.2011
	0-3	01.12.2001		„Appr“ 5-3	12.09.2011
	0-4	01.12.2001		„Appr“ 5-4	12.09.2011
				„Appr“ 5-5	12.09.2011
1	1-1	01.12.2001			
	1-2	12.09.2011	6	6-1	01.12.2001
	1-3	01.12.2001		6-2	01.12.2001
	1-4	21.02.2007		6-3	01.12.2001
				„Appr“ 6-4	01.12.2001
2	„Appr“ 2-1	05.10.2009			
	„Appr“ 2-2	08.12.2003	7	7-1	01.12.2001
	„Appr“ 2-3	05.10.2009		7-2	15.01.2007
	„Appr“ 2-4	01.12.2001		7-3	01.12.2001
	„Appr“ 2-5	12.09.2011		7-4	01.12.2001
	„Appr“ 2-6	05.10.2009		7-5	28.11.2007
	„Appr“ 2-7	12.09.2011		7-6	01.12.2001
	„Appr“ 2-8	01.12.2001		7-7	01.10.2006
				7-8	01.10.2006
3	„Appr“ 3-1	01.12.2001		7-9	01.10.2006
	„Appr“ 3-2	22.09.2004		7-10	01.10.2006
	„Appr“ 3-3	08.12.2003		7-11	15.01.2007
	„Appr“ 3-4	01.12.2001		7-12	15.01.2007
	„Appr“ 3-5	01.12.2008			
	„Appr“ 3-6	01.12.2008	8	8-1	01.12.2001
				8-2	01.12.2001
4	„Appr“ 4-1	15.01.2007		8-3	30.05.2011
	„Appr“ 4-2	15.01.2007		8-4	01.12.2001
	„Appr“ 4-3	15.01.2007		8-5	01.12.2001
	„Appr“ 4-4	01.12.2001		8-6	01.12.2001
	„Appr“ 4-5	01.12.2001			
	„Appr“ 4-6	01.12.2001	9	9-1	01.12.2001
	„Appr“ 4-7	01.12.2001		9-2	01.12.2001
	„Appr“ 4-8	01.12.2001			
	„Appr“ 4-9	01.12.2001			
	„Appr“ 4-10	01.12.2001			
	„Appr“ 4-11	01.12.2001			
	„Appr“ 4-12	12.09.2011			
	„Appr“ 4-13	12.09.2011			

0.3 TABLE OF CONTENTS

SECTION 1

GENERAL

1.1 Introduction

The airplane Flight Manual has been prepared to provide pilots and instructors with information for the safe and efficient operation of this airplane.

This manual contains supplementary data supplied by the airplane manufacturer.

1.2 Certification basis

F-2245 Standard Specification for Design and Performance of a Light Sport Airplane.

1.3 Warnings, cautions and notes

The following definitions apply to warnings, cautions and notes used in the flight manual.

WARNING
Means that the non-observation of the corresponding procedure leads to an immediate or important degradation of the flight safety.

CAUTION
Means that the non-observation of the corresponding procedure leads to a minor or to a more or less long term degradation of the flight safety.

NOTE
Draws the attention to any special item, not directly related to safety but which is important or unusual.

1.4 Descriptive data

1.4.1 Airplane description

WT-9 Dynamic Club S is low-wing monoplane with fixed landing gear. The airframe consists of a sandwich shells from advanced composite material. There are two places in the cockpit, side by side type. This aircraft is intended for sporting, recreation and tourist flying in accordance with VFR.

WT-9 Dynamic Club S has been approved by the DaeC in the Category of Airworthiness : Normal
As the power plant this aircraft uses the 4 cylimder, 4 stroke ROTAX engines, 912 S2.
Propelers: This plane is fitted with 3 bladed in-flight electricaly adjustable propeller and the following type and model is approved: Woodcomp SR 2000 D.

1.4.2 Technical data

Wing span.....	9,00 m
Wing area.....	10,3 m^2
Wing aspect ratio.....	7,82
Length.....	6,4 m
Height.....	2,0 m
Aerodynamic mean chord (MAC).....	1,185 m

Control surfaces

Aileron span.....	1,25 m
Aileron area.....	0,273 m^2
Flap span.....	2,28 m
Flap area.....	0,75 m^2
Horizontal tail span.....	2,40 m
Horizontal tail area.....	1,68 m^2
Vertical tail span.....	1,022 m
Vertical tail area.....	1,02 m^2

Landing gear

Wheel spacing.....	1,49 m
Wheel base.....	2,27 m
Main wheel diameter.....	0,35 m
Nose wheel diameter.....	0,32 m

Weights

Empty weight	kg
Maximum take-off weight.....	472,5 kg
Useful load.....	kg

Fuel tanks capacity.....	litres

The ROTAX 912 S2(73 kW) has a maximum rpm limitation on take off of 5800 1/min. The Woodcomp SR 2000 D. Propeller diameter is 1,7 m.

1.5.1 Three – view drawing

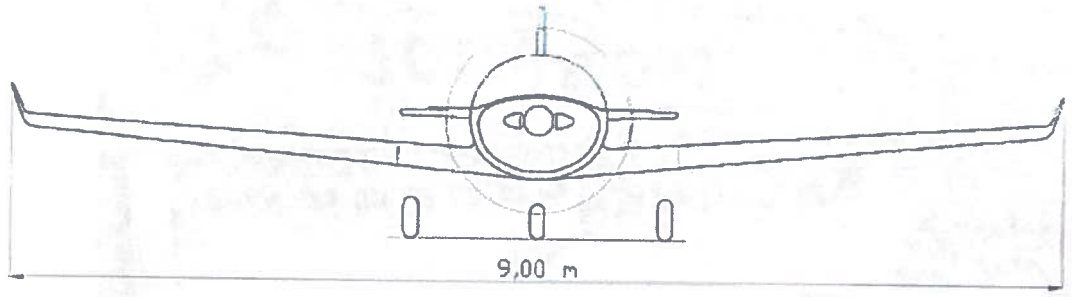

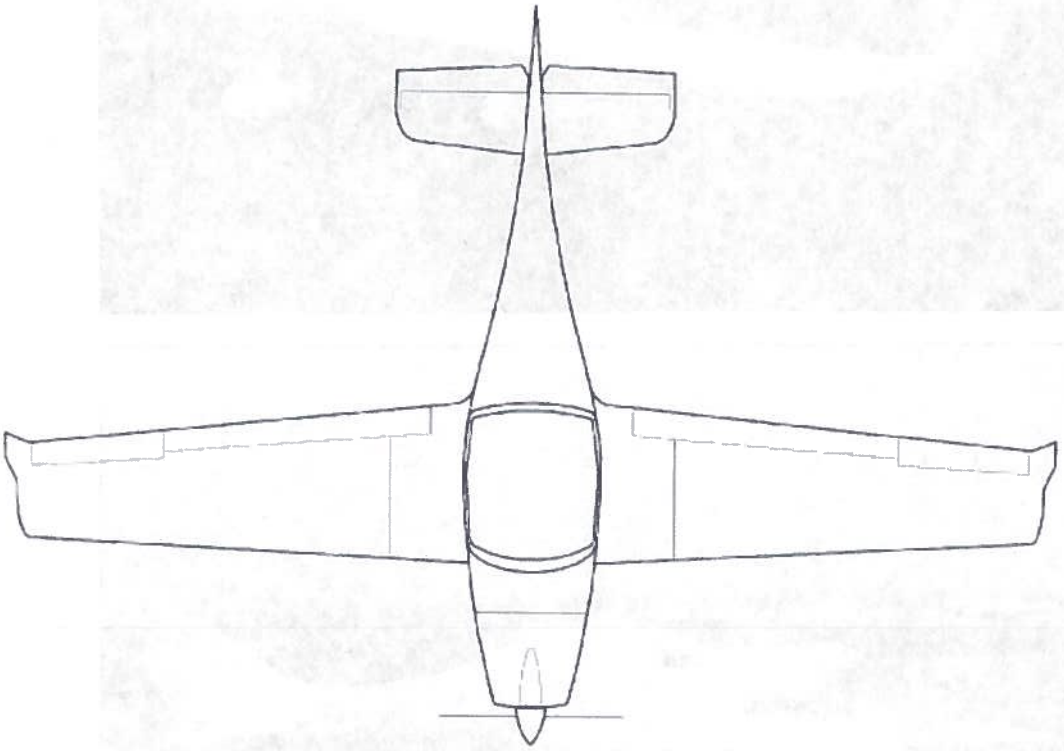

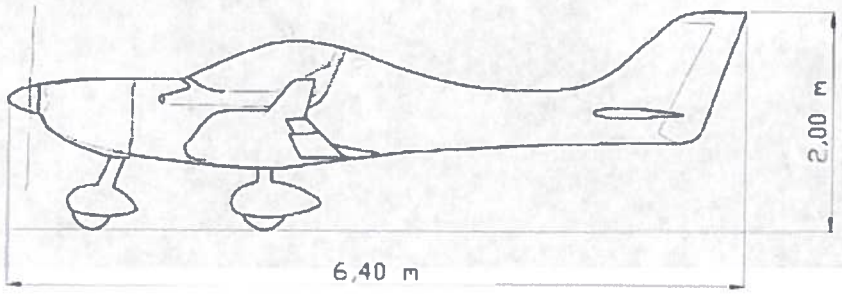

1.5. Airplane views

SECTION 2
LIMITATIONS

2.1 Introduction

Section 2 includes operating limitations, instrument markings, and basic placards necessary for safe operation of the airplane, its engine, standard systems and standard equipment. The limitations included in this section and in Section 9 have been approved by the aviation authority.

2.2 Airspeed

Airspeed limitations and their operational significance are shown below:

	Speed	IAS			Remarks
		km/h	MPH	knots	
V_{NE}	Never Exceed speed	280	174	150	Do not exceed this speed in any operation
V_{NO}	Normal Operating Limit speed	250	156	135	Do not exceed this speed except in smooth air, and then only with caution
V_{RA}	Rough Air speed	230	143	124	Do not exceed this speed except in smooth air. Air movements in lee-wave rotors, thunderclouds, visible whirlwind, or over mountain crests are to be understood as rough air

	Speed	IAS km/h	IAS MPH	IAS knots	Remarks
V_A	Manoeuvring speed	165	103	88	Do not make full or abrupt control movement above this speed, because under certain conditions the aircraft may be overstressed by full control movement
V_{FE}	Maximum Flap Extended speed	140	88	75	Do not exceed these speeds with the given flap setting.

2.3 Airspeed indicator markings

Airspeed indicator markings and their colour-code significance are shown below:

Marking	IAS value or range km/h	MPH	knots	Significance
White arc	65 – 140	40 - 88	35 - 75	Positive Flap Operating Range. (Lower limit is maximum weight 1.1 V_{SO} in landing configuration. Upper limit is maximum speed permissible with flaps extended positive.)
Green arc	70 – 230	43 - 143	37 - 124	Normal Operating Range. (Lower limit is maximum weight 1.1 V_{S1} at most forward c.g. with flaps . Upper limit is V_{RA} .
Yellow arc	230 – 280	143 - 174	124 - 150	Manoeuvres must be conducted with caution and only in smooth air.
Yellow triangle	100	62	53	Minimum Approach speed
Yellow line	165	103	88	V_A Manoevring speed
Red line	280	174	150	Maximum speed for all operations.

2.4 Powerplant

Engine Manufacturer: ROTAX-Bombardier, Gunskirchen, Austria
Engine Models: ROTAX 912 ULS
Maximum Power - Take-off: 73,5 kW / 100 HP
Continuous: 69 kW / 93,8 HP
Maximum Engine Speed – Take-off: 5800 1/min (5 min)
Continuous: 5500 1/min
Maximum Cylinder Head Temperature: 135 ° C
Maximum Oil Temperature: 130 ° C
Oil Pressure: Minimum: 0,8 bar (12 psi)
Maximum: 7 bar (102 psi)
Fuel Pressure: Minimum: 0,15 bar (2.2 psi)
Maximum: 0,4 bar (5.8 psi)

Fuel Grade: the following fuels can be used:
min. RON 95

- EN 228 Super (Unleaded Automotive Gasoline RON 95)
- EN 228 Super plus (Unleaded Automotive Gasoline RON 98)
- AVGAS 100 LL (Due to the higher lead content in AVGAS, the wear of the valve seats, the deposits in combustion chamber and lead sediments in the lubrication system will increase. Therefore, use AVGAS only if you encounter problems with vapour lock or if the other fuel types are not available)
- Fuel E10 (unleaded gasoline blended with 10% ethanol

Oil Grade:	- engine oil of a registered brand with gear additives. Use only oil with API classification „SF“ or „SG“ - high performance 4-stroke motor cycle oils are recommended - If using aircraft engine oil, then only blended one.
Oil capacity:	3,0 litre
Minimum:	2,0 litre
Oil consumption:	max. 0,1 l/h

WARNING
Never use AVGAS, LB 95 with fully synthetic engine oils.

Propeller Manufacturer:	DUC- Helices, Lentilly, France
Propeller Model:	DUC Swirl, 3 blade on ground adjustable propeller
Propeller Diameter:	1,7 m
Propeller Blade Angle	24°

Additional data can be found in Section 7, Subpart 7.9, in the Operator Manual for engine ROTAX 912 ULS and in the User Guide for propeller DUC Swirl.

WARNING
Never run the engine without propeller, this inevitably causes engine damage and is an explosion hazard.

2.5 Powerplant instrument markings

According to customer requirement round one–purpose needle instruments are fitted in the instrument panel.

Powerplant instrument markings and their colour code significance are shown below:

Instrument (indication within EMS D-1000)	Unit	Red Line Minimum Limit	Green Arc Normal Operating	Yellow Arc Caution Range	Red Line Maximum Limit
Tachometer	**rpm**	**1 400**	**1 800 – 5 500**	**5500–5800**	**5 800**
Oil temperature indicator	**°C**	**50**	**90 – 110**	**50 – 90** **110 – 130**	**130**
Cylinder-head temperature indicator	**°C**	**50**	**90 – 110**	**50 – 90** **110 – 135**	**135**
Fuel-pressure indicator	**bar**	**0,15**			**0,4**
Oil-pressure indicator	**bar**	**0,8**	**2– 5**	**0,8 - 2** **5 – 7**	**7**
Fuel indicator	**litre**				

2.6 Miscellaneous instrument markings

According to option of the customer miscellaneous instrument can be mounted. The following miscellaneous instrument markings and their colour code significance are shown below:

Instrument	Unit	Red Line Minimum Limit	Green Arc Normal Operating	Yellow Arc Caution Range	Red Line Maximum Limit
Boost-pressure gauge (EMS D-1000)	**in Hg**	**11,8**	**11,8-28**	**28-29,5**	**29,5**
Exhaust gas temperature (EMS D-1000)	**°C**	**250**	**300-800**	**250-300** **800-880**	**880**
Fuel flow meter (EMS D-1000)	**LPH**		**up to 25**		**25**
Fuel reserve indicator	**litre**	**Red light annunciator will be illuminated with the remaining fuel of 7 litre in each fuel tank.**			

2.7 Weight

Empty weight ..... kg
Maximum take-off weight..... 472,5 kg
Maximum landing weight ..... 472,5 kg
Useful load ..... kg
Maximum fuel weight ..... kg
Maximum weight in Baggage Compartment..... 10 kg

WARNING
Maintain maximum take off weight 472,5 kg

Depending on different countries rules

2.8 Centre of gravity

Position of C.G.:
Empty airplane.....12 ± 2% MAC
Position of C.G. in flight.....20 ÷ 30% MAC
Rear centre of gravity limit is valid for en-route weight at maximum crew weight. Forward centre of gravity limit is valid for minimum pilot weight 70 kg and minimum capacity of the fuel tanks. Example to check the centre of gravity position is in Sect. 6.

2.9 Approved manoeuvres

WT-9 Dynamic Club S is certified in the Normal Category. The following manoeuvres are permited:

- **Steep turns with the angle of bank up to 60°** - appropriate entry speed is **140** km/h.
- **Lazy eighths** - appropriate entry speed is **140** km/h.
- **Combat turns** - appropriate entry speed is **200** km/h.

WARNING
Aerobatic manoeuvres and intentional spins are prohibited!

2.10 Manoeuvring load factors

Manoeuvre speed	Speed			Load factors
	km/h	MPH	knots	
V_A- Manoeuvring speed	165	103	88	+ 4
V_{NE} - Never exceed speed	280	174	150	+ 4
V_A – Manoeuvring speed	165	103	88	-2
V_{NE} - Never exceed speed	280	174	150	-2
V_{FE} – Maximum Flap Extended speed	140	88	75	+ 2

2.11 Flight crew

The minimum flight crew with which the airplane is allowed to fly is one pilot sitting in the left pilot seat. The passenger or another pilot may occupy the right seat in the cockpit.

2.12 Kinds of operation

The aircraft WT9 Dynamic LSA Club S is approved to perform flights in accordance with VFR day only. Aerobatic manoeuvres and intentional spins are prohibited!

WARNING
IFR flights and flights in icing conditions are prohibited.

For flight operations the following minimum equipment must be installed:
- Magnetic compass
- Sensitive barometric altimeter
- Airspeed indicator
- Pilot's Safety belts

2.13 Fuel

The following fuels and oils can be used for the aircraft WT9 Dynamic LSA Club S : see chapter 2.4 Powerplant and the Operator's Manual for engine ROTAX 912 ULS.

	Left tank (l)	Right tank (l)
The total quantity of fuel in the tank		
Unusable fuel in the tank		
The total usable quantity of fuel in the tank		

2.14 Maximum passenger seating

The maximum number of passenger aboard is one passenger sitting in the right seat in the cockpit.

2.15 Other limitations

The maximum demonstrated crosswind velocity for take-off and landing is **12,4 m/s (24 knots).**

NO SMOKING on board the ultralight aircraft.

Maximum towing cable load is 3.000 N. If the strength of tow cable is more than 3000 N a weak link must by used.

Maximum weight of towed glider is 750 kg.

Maximum weight of towing aircraft by 1 pilot occupation is 440 kg.

2.16 Limitations placards

Airspeed IAS				
		km/h	**MPH**	**knots**
Never Exceed speed	V_{NE}	**280**	**174**	**150**
Normal Operating Limit speed	V_{NO}	**250**	**156**	**135**
Rough Air speed	V_{RA}	**230**	**143**	**124**
Manoeuvring speed	V_A	**165**	**103**	**88**
Maximum Flap Extended speed	V_{FE}	**140**	**88**	**75**

Aerobatics, intentional spins and stalls are prohibited!

IFR flights and flights in icing conditions are prohibited !

Maximum allowed filling of the fuel tanks in litres									
Baggage weight (kg)	Crew weight (kg)								
	160	170	180	190	200	210	220	230	240
0	full	99	85	71	57	43	29	15	1
5	full	92	78	64	50	36	22	8	0
10	99	85	71	57	43	29	15	1	0

Maximum Baggage weight 10 kg

SECTION 3

EMERGENCY PROCEDURES

3.1 Introduction

Section 3 provides checklist and amplified procedures for coping with emergencies that may occur. Emergencies caused by airplane or engine malfunction are extremely rare if proper preflight inspections and maintenance are practised.
However, should an emergency arise, the basic guidelines described in this section should be considered and applied as necessary to correct the problem.

3.2 Engine failure

3.2.1 Engine failure at take-off run

1. Throttle lever - set to idle position
2. Ignition - both circuits switched off
3. Brakes - apply till stop

3.2.2 Engine failure at take-off up to height 50 m

1. Airspeed - modify to 120 km/h
2. Field selection - land straight ahead no more than 15° left or right into wind if possible. Ground loop if required.
3. Ignition - both circuits switched off
4. Fuel selector - close

3.2.3 Engine failure at take-off above height 50 m

1. Airspeed - modify to 120 km/h
2. Field selection - select in the direction of the free area without obstacles, if possible into wind
3. Ignition - both circuits switched off
4. Fuel selector - close
5. Flaps - extend as required

3.2.4 Engine failure in flight

1. Airspeed - modify to 120 km/h
2. Field selection - according to height available
3. Air start - in accordance with item 3.3
4. In case of an unsuccessful air start, perform emergency landing in accordance with item 3.6.1.

3.2.5 Performance loss and irregular running of the engine during flight

This situation may occur with carburettor icing.
Apply carburettor pre-heating as required to restore normal power, smooth running.
Or it can happen because of empty fuel tank, the indicator is the fuel pressure loss – select the non empty fuel tank. If everthihg fails perform an emergency landing.

3.3 Air start

1. Airspeed -modify to 120 km/h
2. Altitude flight - check
3. Field selection - select according to height available
4. Fuel selector - open
5. Choke - if the engine is already in operating temperature, start the engine without choke
6. Throttle lever - at cold engine set to idle position
   - at warm engine slightly open
7. Ignition - both circuits switched on
8. Starter button - actuate

As soon as engine runs, adjust throttle to achieve smooth running at 2500 r.p.m for approximately half a minute before increasing power as required.

WARNING

The rate of descent approx. 2.5 m/s causes measurable loss of altitude during the air start. If the air start is unsuccessful up to height 150 m above ground level, perform emergency landing according to item 3.6.1.

3.4 Smoke and fire

3.4.1 Engine fire on the ground

1. Fuel selector - close
2. Throttle lever - full open
3. Ignition - both circuits switched off after consumption of the fuel
4. Crew - leave the cockpit immediately
5. Extinguish fire - with best available means

3.4.2 Engine fire in flight

1. Fuel selector - close
2. Throttle lever - full open
3. Ignition - both circuits switched off after consumption of the fuel

4. Try to extinguish the fire with side slip
5. Perform emergency landing in accordance with item 3.6.1.

CAUTION
After extinguishing the fire do not start engine again!

3.4.3 Fire in cockpit

1. Fire source - locate
2. Ignition - both circuits switched off
3. Master switch - off
4. Crew - leave the cockpit on the ground ,
   - perform emergency landing accordance with item 3.6.1.
5. Try to extinguish - with best available means

3.5 Glide

Glide path will determine the field selection for emergency landing. The optimum gliding performance is with retracted wing flaps and with stopped propeller.

In case of engine failure it is necessary to maintain the following optimum speeds for given configuration.

Optimum descent airspeed IAS	**km/h**	**MPH**	**knots**
	115	**72**	**62**
Maximum gliding range	**13**		
Rate of descent	**2,2 m/s 440 ft/min**		

3.6 Landing emergency

3.6.1 Emergency landing

1. Airspeed - modify to 115 km/h
2. Field selection - select in the direction of the free area without obstacles, if possible into wind
3. Seat belts and harness - fasten
4. Flaps - extend as required
5. fuel selector - close
6. Ignition - both circuits switched off
7. Master switch - off

CAUTION
The loss of height for 360 ° turn is approx.. 180 m.

3.6.2. Precautionary landing

In the event of the airplane failure, disorientation, shortage of fuel, dangerous deterioration of the meteorological conditions (visibility, thunderstorm) and approaching sunset, a precautionary landing should be conducted.

1. Select a suitable landing field, if possible into the wind.
2. Fly over selected field with wing flaps 15° and 120 km/h airspeed at a height 50 m AGL, noting the preferred area for touchdown for the next landing approach to inspect the terrain for obstructions and surface conditions.
3. Make landing circuit at a height 150 m AGL or at a safe altitude in accordance with the ceiling with flaps 15° and 120 km/h airspeed. Extend "down wind" position and make approach with sufficient power.
4. Don't lose sight of the selected field in low visibility.
5. Landing approach with flaps for landing and sufficient power.
6. Arrange approach so that the desired touch down spot will be immediately after passing the edge of the selected landing field.
7. After touch down apply heavy breaking till stopped. ground loop if necessary.
8. When the airplane comes to a stop, shut down the engine, master switch off, Main fuel selectors close, secure the airplane and seek assistance.

3.6.3 Landing with a flat tyre

1.	Landing approach	- with flaps 35 ° and 110 km/h airspeed
2.	Touch down	- with the bank angle on the unflat tyre at minimum touch down speed,
3.	Direction after landing	- maintain ground roll direction.

3.7 Recovery from unintentional spin

For recovery from an unintentional spin the following procedure should be used:

1.	Throttle lever	- set to idle position
2.	Control stick	- set neutral position, without deflection of the ailerons
3.	Rudder control	- apply full rudder opposite to the direction of rotation
4.	Control stick	- move forward of neutral in a brisk motion until rotation stops.
5.	Rudder control	- immediately as rotation stops, neutralize rudder position
6.	Control stick	- make a smooth recovery from the resulting dive.

WARNING
Intentional spins are prohibited!

3.8 Other emergencies

3.8.1 Control failures

Aileron control fault - the airplane is possible to control laterally by the secondary effect of the rudder. Start and termination of the yawing up to bank angle 15° is possible using the rudder only.

Rudder control fault - the yawing and the termination is conducted with help of the lateral control of the ailerons.

3.8.2 Vibrations

The power plant can be the source of the vibrations.

1. Reduce engine speed to minimize the vibrations.
2. Proceed to the nearest airport for landing or select a suitable precautionary landing field in accordance with item 3.6.2.

3.8.3 Rescue system

For operation and handling with rescue system to see Operation manual delivered by producer of eqipment.

3.8.4 Unsecured cockpit canopy

If the „Before Take-off" Checklist is performed insufficiently (page 4-9, paragraph 4.5.5. , point 10 canopy of cockpit – latched, locked), there is a danger of partial cockpit canopy latching or non locking. The canopy is equipped with a lock on the upper rear section of the frame and it is secured by the lock lever shot backwards. The lock pin is projected as latch with compression spring. The gap cca. 8-12 mm will be rise between fuselage and cockpit canopy, which is constant during straight line flight without side-slipping due to the air flow and the function of the gas struts. Partial cockpit canopy latching or non locking will stack up by the noise increase due to the agitated air through the gap between fuselage and cockpit canopy. Partial cockpit canopy latching is possible to close safely during straight line flight without side-slipping by the following way according to appropriate stage of flight:

3.8.4.1 During take-off roll

1. Abort the take-off, if the cockpit canopy unlatching, unlocking is detected during take-off roll.
2. Latch and lock the cockpit canopy by normal procedure after stopping. (the cockpit canopy handle pull down and check the cockpit canopy latching and locking by canopy frame and the red ring position) (see page 7-5, paragraph 7.8)

3.8.4.2 After unstick or during climbing

1. Safely terminate take-off
2. Climb to safety altitude
3. Fly straight line flight without side-slipping and carry out procedure for level flight.

3.8.4.3 Level flight

1. Open the left ventilation sliding window on cockpit canopy
2. Reduce speed to 120 km/h
3. Hold control stick by one hand
4. The cockpit canopy handle pull down for cockpit canopy latching and locking
5. Check the cockpit canopy latching and locking by canopy frame and red ring position
6. Close the left ventilation sliding window on cockpit canopy
7. Adjust flight airspeed to cruising speed

WARNING

During side-slipping flights (incorrect turn –slipping turn, skidding turn, and side slipping for landing) with partial cockpit canopy latching or non locking due to asymmetrical flow over fuselage by the air flow, the cockpit canopy will be carved through the gap and subsequently will be full open by help of the gas struts. The cockpit canopy will become the braking shield, what will cause abnormal airplane descent due to increased total drag.

SECTION 4

NORMAL PROCEDURES

4.1 Introduction

Section 4 provides checklist and amplified procedures for the conduct of normal operation. Normal procedures associated with optional systems can be found in Section 9.

4.2 Rigging and derigging

4.2.1 Rigging of the wings

The airplane has the wings disassembled for transportation purposes or to save space in the hangar. There is a description for the rigging procedure of the right wing. The procedure for the left wing is analogous. Thoroughly clean and lubricate all the wing fitings and pins so pins locate easily.

Rigging:

1. Fit the spar end of the right wing into the spar end (fork) of the wing central section and push the wing along its longitudinal axis so that a connection slot between the wing central section and the wing root is approx. 100 mm (Fig. 3). Connect the hoses from the Pitot-static tube and prepare and adjust the wing fuel tank hoses, connect the wiring for fuel tank conductive connection ans position lights
2. Fully push the wing into the wing central panel and slide the wing tank fuel houses on theirs sockets together with theirs clamps. Carefully insert the pin of the extended wing flap hinge into the fitting of the wing central panel. Take care of the hoses from the Pitot-static tube and for fuel houses they must not be twisted.
3. Insert wing pins to connect wing spar end with the wing central panel. The outer pin is inserted through the access hole on the lower wing surface . The inner pin is inserted through the hole in the cockpit below pilot seat (slightly lift and lower the wing tip to ease the pin insertion).
4. Insert rear spar into the fitting to lecate the rear spar to the centre section. Secure all 6 pins with safety pins (Fig.4).
5. Insert connecting pin of the flap rod. During this procedure the flap control lever in the cockpit shall be set to the rearmost position and the flap shall be deflected to maximum down position.

7. Connect the aileron control rod with the rod in the wing centre section and secure the nut (Fig.4) with the safety pin. Than tight the fuel houses clamps.
8. Repeat the procedure with the second wing. After checking the security of the all connection. The connection slot between wing and the wing centre section should be sealed with sticky tape.

WARNING

After rigging of the wings check for correct operation and security of the aileron control pins and the flap control pins as well as the connection of the hoses from the Pitot-static tube and fuel houses.

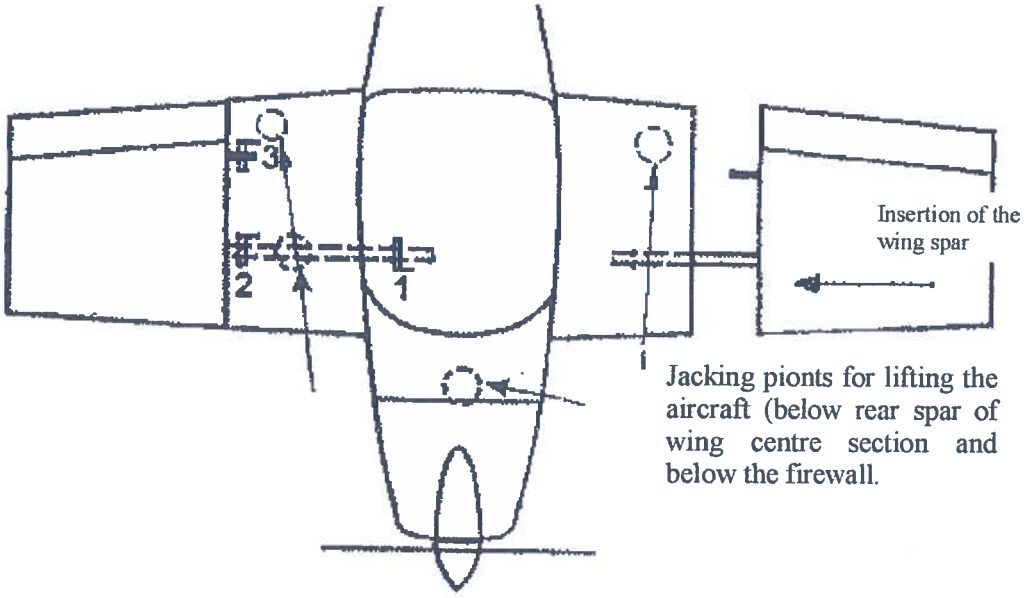

Fig. 3 Insertion of the wing spar into the wing centre section, position of the wing pins and the support points.

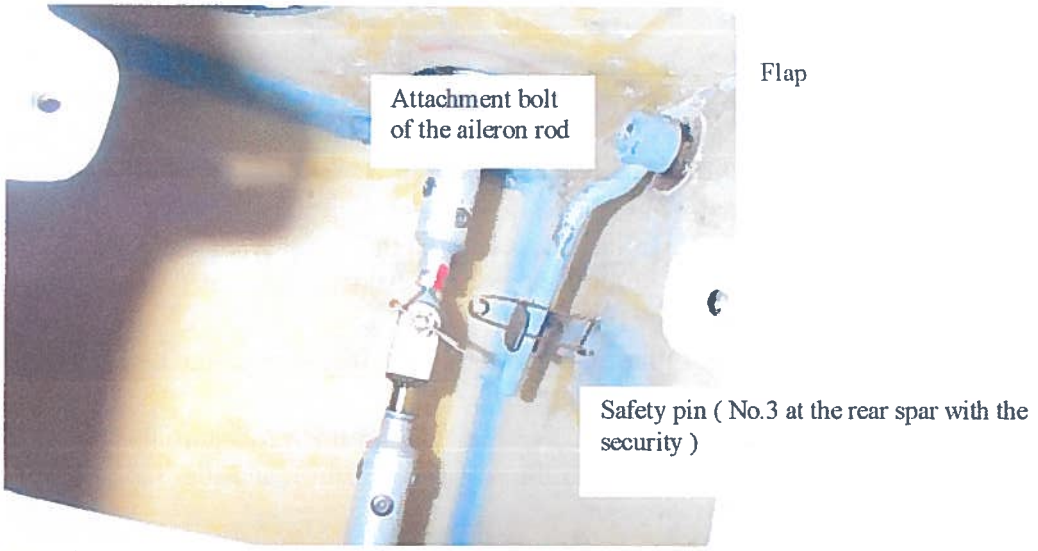

Fig. 4. Connecting bolt + safety pin of aileron connection.

4.2.2 Derigging of the wings

Use the opposite sequence for derigging:

1. Drain right side central section fuel tank.
2. Disconnect aileron rod from the rod in the wing centre section.
3. Remove the sticky tapes from the connection slot between wing and the wing centre section. Unlock the joints of the flap shaft.
4. Pull out all wing pins. (Pull out the fixation pins for connection of the wing spar end with the wing central panel and the auxiliary rear pin.)
5. Pull out the wing along its longitudinal axis so that there is a distance between the wing and the wing root of approx. 100 mm (Fig. 3). Disconnect the hoses from the Pitot-static tube, the wing fuel tank hoses, disconnect the wiring for fuel tank conductive connection and position lights.
6. Carefully pull the wing away from the wing centre section and put on soft mats.

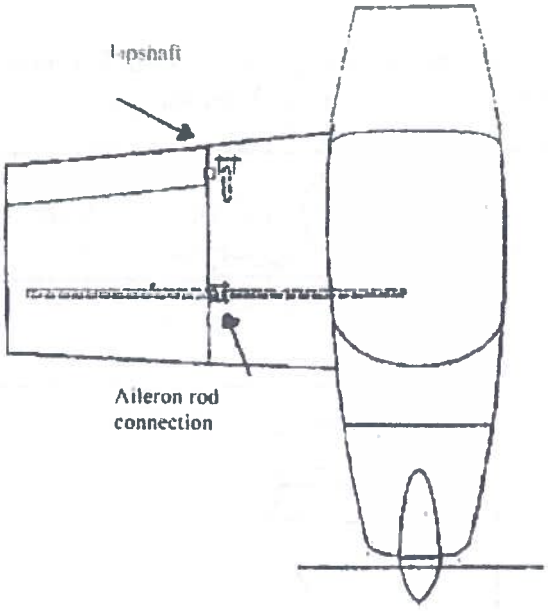

Fig. 5 Connecting position for the flap and the aileron.

4.3 Daily inspection

The daily inspection must be performed every day before flight of the airplane. The scope of this inspection is to check the following:

1. Airplane log-book and airworthiness certificate
2. Airplane technical log-book
3. Cockpit
4. Landing gear
5. All control surfaces for full and free movement
6. All surfaces of the airplane for cracks, nicks or any visible damage.
7. Power plant and propeller
8. Check fuel, oil, coolant liquid.

WARNING
If any problems are found they must be corrected before flying.

4.4 Preflight inspection

It is most important to perform a preflight inspection carefully to prevent possible trouble. The preflight inspection is essential for flight safety.

CAUTION
Special attention must be devoted to the parts, which are affected by high vibrations and high temperatures.

Preflight inspection procedure:

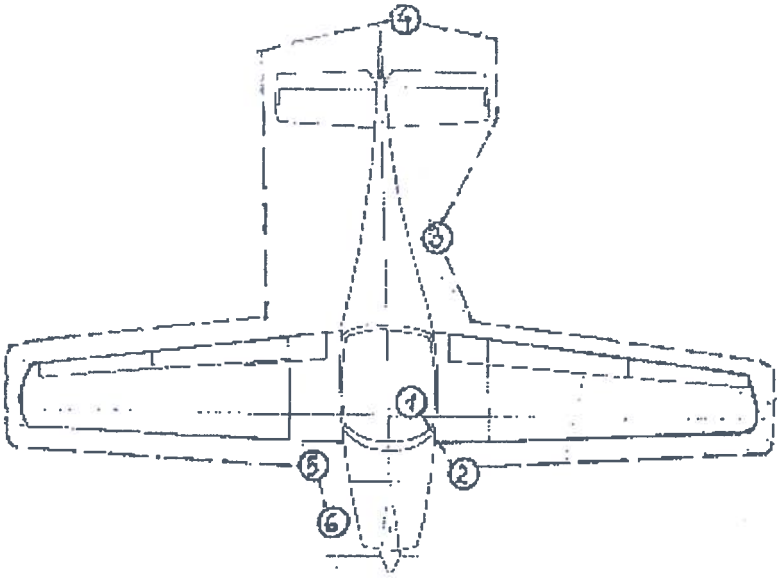

Fig. 6 Walkaround inspection

1. Cockpit:

Flight controls	- check for freedom of movement
Master switch	- switched off
Ignition switch	- both circuits switched off
Loose items	- secure or remove
Check instruments	- set "O"
Cockpit canopy glass	- clean, check cockpit canopy lock
Safety harness	- inspect
Fuel	- check fuel quantity, check fuel selector
Propeller	- blade´s leading edge soundness

2. Wing

Surface	- state of wing surface
Connection	- wing pins fully inserted and secured
Pitot static head	- pitot tube cover removed, check opening for blockage.
Leading edges	- without damage, clean
Ailerons	- check for freedom of movement and security
Flaps	- without play, check hinges for security

3. Fuselage

Surface	- without damage
Static pressure receivers	- check opening for blockage
Antennas	- fixed, without damage
Cockpit wing walks	- without damage

4. Tail units

Surface	- without damage
Control surfaces	- check for freedom of movement , without excess play
Auxiliary tail skid	- check for secure attachment

5. Landing gear

Main wheel tyres	- state, inflation (250 kPa)
Brakes	- visually check condition of pads, brake system for leaks
Legs	- state without damage, attachment
Nose wheel leg	- nose wheel tyre state, inflation (200 kPa) attachment, suspension check, wheel free rotation

6. Powerplant

Propeller - attachment, leading edge blade state, check for nicks and security, check spinner for cracks and attachment.

Engine

- check for any operating fluids leaks below engine cowlings
- state of the cowlings
- state of the exhaust system attachment
- state of the engine attachment into the rubber engine mants.
- check coolant level and oil level
- check attachment of carburettors
- check electric system state
- state of the holder hoses
- check condition and integrity of wires, plug
- check fuel filter
- turn the propeller by hand several times for odd noises or excessive resistance and normal compression.

WARNING

Before cranking the propeller switch off both ignition circuits. The propeller must be caught at the blade surface every time. Do not catch at the edge.

4.5 Normal procedures and check list

The standard cockpit control arrangement is shown in fig.7 and the actual instrument panel is shown in fig.9.

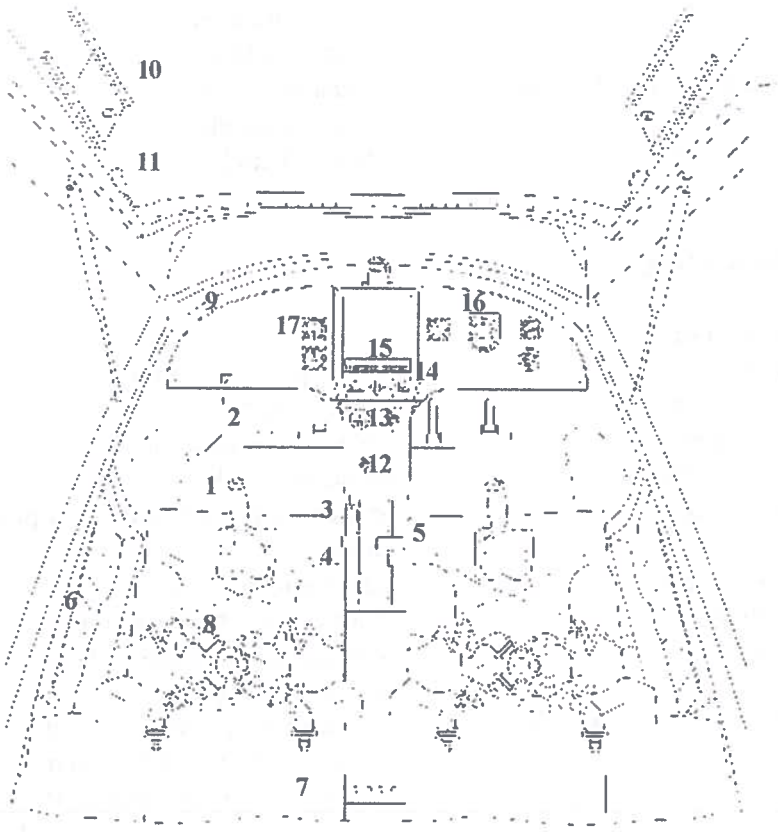

Fig. 7. The standard cockpit controls (see also fig.9 on page 7 – 3)

1. Control stick
2. Rudder pedals
3. Elevator trim control lever
4. Brake control lever
5. Wing flaps control lever
6. Pocket
7. Headset socket / jack
8. Seat and safety belt
9. Instrument panel
10. Ventilation sliding window
11. Ventilation flow baffle
12. Fuel tank selector
13. Chock and throttle lever
14. Ignition, Starter key, Master switch
15. GPS, Radio, Transponder
16. Powerplant instruments
17. Flight instruments

4.5.1 Before starting engine

1. Ignition	- both circuits switched off
3. Rudder pedals	- freedom of movement
4. Control stick	- freedom of movement
5. Throttle lever	- freedom of movement, set to idle position
6. Elevator trim control	- set neutral position
7. Fuel quantity	- check
8. Instruments	- setting and check up of the value
9. Radio	- function check
10. Seat and safety harness	- adjust and lock
11. Brake	- function check
12. Canopy of cockpit	- shut and latched

4.5.2 Engine starting

Cold engine:

1. Brakes	- set on parking position
3. Master switch	- switched on
4. Starter key	- switch to 1. position
5. Fuel selector	- select left tank
6. Fuel pump	- switch on and establish fuel pressure then switch off
7. Choke	- open
8. Throttle lever	- set to idle position
9. Ignition	- both circuits switched on
10. Starter key	- actuate, activate starter for max. 10 sec only without interruption
11. As soon as engine runs	- adjust throttle lever to achieve smooth running at approximately 2000 r.p.m, check if oil pressure has risen within 10 sec to 2 bar and monitor oil pressure, choke off
12. Warming up	- start warming up period at 2000 r.p.m for approx. 2 minutes, continue at 2500 r.p.m, duration depending on ambient temperature, until oil temperature reaches 50 °C

Warm engine: if the engine is already at operating temperature

1. Fuel selector	- left tank
2. Throttle lever	- set to slight open position
3. Brakes	- set on parking position, control lever secured
4. Master switch	- switched on
5. Ignition	- both circuits switched on
6. Starter key	- actuate, activate starter for max. 10 sec only without interruption
7. As soon as engine runs	- adjust throttle lever to achieve smooth running at approximately 2000 r.p.m, check if oil pressure has risen within 10 sec to 2 bar and monitor oil pressure,

4.5.3 Engine warming up

In accordance with the Operator's Manual for all versions of ROTAX 912 as follow: Start warming up period at 2000 r.p.m for approx. 2 minutes, continue at 2500 r.p.m, duration depending on ambient temperature, until oil temperature reaches 50 °C.

Engine ground test:

1. Ignition check – check the two ignition circuits at 4000 r.p.m. Speed drop with only one ignition circuit must not exceed 300 r.p.m. Max. difference 120 r.p.m of speed by use of either circuit A or B
2. Throttle response – short full throttle ground test, speed must not exceed 5800 r.p.m.
3. The minimum speed on the ground must be 5000 r.p.m depending on ambient temperature and pressure
4. Check idle speed 2000 r.p.m

4.5.4 Taxying

Use of the Vernier throttle (screw in, screw out) will help with smooth adjustments of power during taxying. Taxying of the airplane is controled by he rudder pedals which are connected to the nose wheel steering. The wheel brakes are actuated by sliding the brake lever rearwards in the centre console.

4.5.5. Before take-off

1. Rudder pedals	- freedom of movement
2. Control stick	- freedom of movement
3. Elevator trim control	- set neutral position
4. Wing flaps	- set take off position
5. Fuel selector	- left tank
6. Fuel pump	- switched on
7. Power plant instrument	- check for correct readings
8. Flight instrument	- check altimeter setting
9. Seat and safety harness	- adjust and lock
10. Canopy of cockpit	- latched, locked

4.5.6. Normal Take-off

- Throttle lever – full open,
- control stick set into neutral position
- direction on the ground run controled by rudder pedals
- unstick at speed at 80-85 km/h (according to take off weight)
- accelerating at speed 110-120 km/h (acceleration after unstick)
- adjust cruising power (engine speed 5000 r.p.m)
- at heigth 50m AGL wing flaps up

4.5.7. Climbing

Normal climbs are conducted at climb speeds 110 - 120 km/h in accordance with the take off weight of the airplane. Monitor cylinder head temperature and oil pressure during climb. Oil temperature limits must not be exceeded. In case of high readings, increase airspeed and reduce engine power setting.

4.5.8. Cruise

The range of cruising speeds is from 140 to 230 km/h in accordance with the engine speed setting from 4000 to 5200 r.p.m. The economy airspeed for best fuel economy is at 140 km/h, the optimum operation is between 180 km/h to 200 km/h. In case of turbulence reduce cruising speed below 160 km/h. Under certain conditions the airplane may be overstressed. The airplane is able to be trimmed through the range of the cruising speeds. Due to economy reasons is recommended to maintain the following data:

EngineROTAX 912 ULS Engine power setting	Engine Speed (r.p.m)	Performance (kW)	Torque (Nm)	Manifold pressure (in Hg)
Take-off performance	**5 800**	**73,5**	**119,0**	**27,5**
Cruising power	**5 500**	**69,0**	**121,8**	**27**
75 %	**5 000**	**51,0**	**97,4**	**26**
65 %	**4 800**	**44,6**	**88,7**	**26**
55 %	**4 300**	**38,0**	**84,3**	**24**

4.5.9. Descending

Descending is conducted at airspeeds 110 – 120 km/h with the throttle lever set to idle position. For increasing the rate of descent it is recommended wing flaps set to landing position (35° flaps deflection) and proceed at airspeed 115 km/h. In this configuration the gliding range is 1:13.

Side slipping is conducted with airspeed 120 km/h, and bank angle 30° with help of the full rudder deflection. The side slip direction is controlled by the bank.

4.5.10 Landing

Check systems of a fuel before approach for landing. Landing approach conduct at small glide slope angle due to long distance of the float before airplane touch-down

1. Fuel pump - switched on
2. Approach speed 110-120 km/h according to the weight.
3. Wing flaps - as required flaps down at speed below 140 km/h
4. Elevator trim – adjust as required
5. Begin levelling out at height circa 2-3 m.
6. Actual touchdown should be made with power-off and on the main wheelsfirst. The nose wheel should be lowered smoothly to the runway as speed is diminished.
7. During landing run control the airplane with help of the rudder pedals.
8. Apply braking as required. The main wheel brakes are actuated via the handle on the pedestal between the pilot seats.

4.5.11 Balked landing

1. Smoothly adjust the throttle lever – full open (a thrust yawing moment is manifested in case of the steep setting of the throttle lever)
2. Airspeed modify to 120 km/h
3. The wing flaps setting reduced to take-off position
4. Elevator trim – adjust as required and proceed in the climb out

4.5.12 After landing

1. Engine speed - adjust throttle for taxying
2. Wing flaps - retract
3. Elevator trim - set to rearmost position of neutral
4. Fuel pump - switched off
5. Taxying - into the parking position

4.5.13. Securing aeroplane

1. All electronic instruments (avionics) - switch off
2. Propeller - set minimum pitch (take off position)
3. Throttle - idling turns
4. Ignition - switch off the first circuit and after 2-3 s switch off the second circuit
5. Master switch - switch off
6. Fuel cock - close in case of lengthy duration on the ground
7. Brakes - set on parking position, control lever secured
8. Rescue system - lock the control lever
9. After leaving the cockpit, the canopy should be covered with the cloth dust-cover, to avoid the effects of the sun.

When landing in a strong crosswind, use the minimum flap setting (position 1 or 2 maximum, never position 3) required for the field length. Although the crab or combination method of drift correction may be used, the wing low method gives the best control.
After touchdown, hold a straight course with the steerable nose wheel, with aileron deflection as applicable, and occasional braking if necessary.

SECTION 5

PERFORMANCE

5.1 Introduction

Section 5 provides approved data for airspeed calibration, stall speed and take-off performance and non-approved additional information. The data in the charts has been computed for condition of the standard atmosphere from actual flight tests with the airplane at maximum take-off weight and engine in good condition and using average piloting techniques.

5.2 Approved data

5.2.1 Airspeed indicator system calibration

IAS (km/h)	56	73	88	102	115	125	135	145	165	175	185
CAS (km/h)	70	80	90	100	110	120	130	140	160	170	180

IAS (km/h)	205	225	243	264	285
CAS (km/h)	200	220	240	260	280

IAS = indicated airspeed
CAS = calibrated airspeed

5.2.1 Stall speed

Weight 472,5 kg, C.G. in 25% MAC, idle engine speed

Position wing flaps	0°	15°	38°
Stall speed IAS in km/h	60	55	50
Stall speed CAS in km/h	72	70	65

5.2.2 Take-off performance

The data is valid for following conditions: H = 0 m MSL, Temperature t = 15 ° C
Wing flaps position 15° and engine ROTAX 912 S2

Surface of the runway	Take-off run distance (m)	Take-off distance up to 15m (m)
Paved runway	75	252
Non paved – grass	86	264

5.2.3 Landing distance

The data is valid for following conditions: H = 0 m MSL, Temperature t = 15 ° C
Wing flaps position 35° , landing run is braked.

Surface of the runway	Landing distance (m) from height 15 m	Landing run distance (m)
Paved runway	267	152
Non paved - grass	258	144

5.2.4 Climb performance

The data is valid for weight 472,5 kg , without flaps.
Engine ROTAX 912 2S, speed 5500 r.p.m
Propeller SR 2000 D

Altitude (m)	Speed IAS km/h	Rate of climb m/s
0	120	6,2
1000	120	5,9
2000	120	5,2

The service ceiling is 5500 m for models equipped by engine ROTAX 912 S2 at the cruising power.

5.3 Additional information

5.3.1 Cruise

The following graph shows the reached speeds depending on the engine speed and the fuel consumption.

Fuel consumption of the aeroplane WT-9 Dynamic Club S with engine ROTAX 912 S2, propeller SR 2000 D

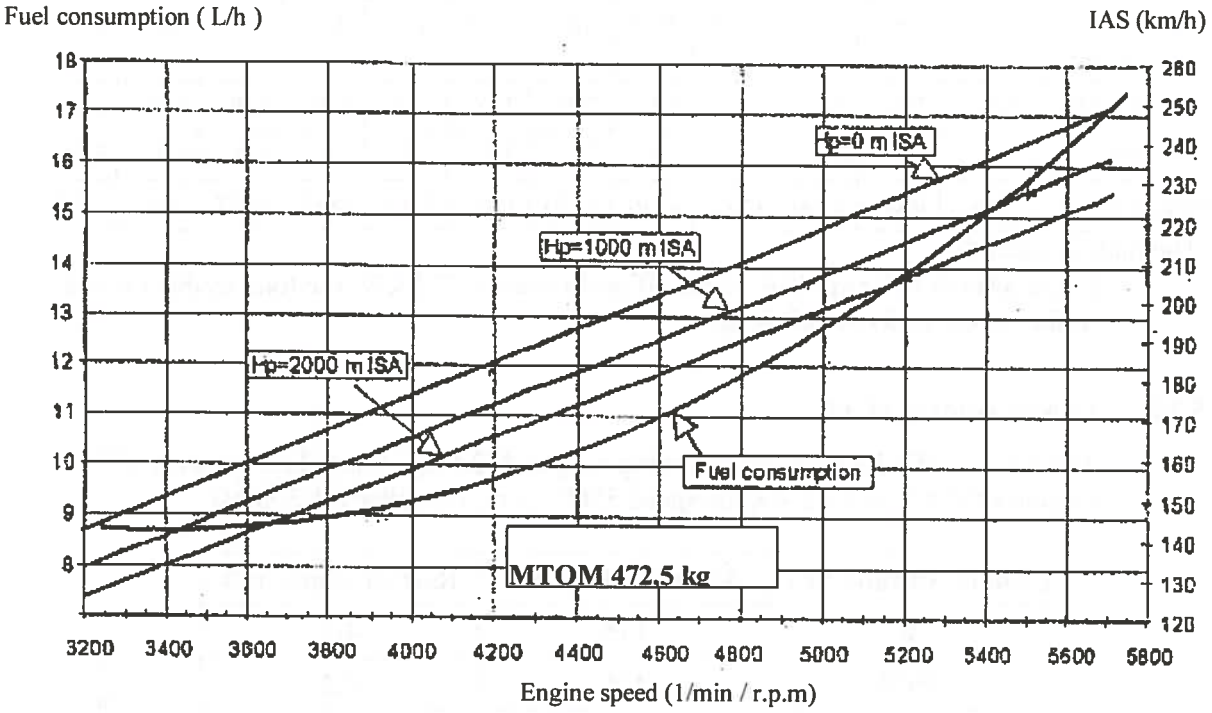

Fig. 8 Fuel consumption graph

5.3.2 Endurance

The power requirement of propeller in the dependence of the airspeed has the quadrate running. The power consumption and also the fuel consumption increases with square of the airspeed. The flight altitude is another factor, which effects the fuel consumption, because the performance drop with increasing flight altitude. The minimum fuel consumption is at lift-over-drag maximum speed, which is 115 km/h. The minimum fuel consumption is at lift-over-drag maximum speed, which is 115 km/h. The good compromise for effective cruising performance is the airspeed range from 180 to 220 km/h.

The following table shows the fuel consumption for engine ROTAX 912 S2 with take-off performance 73,5 kW at different engine speeds. The propeller setting is not determined, due to flat running of the propeller curve optimum. The engine speed has greater effect in its upper section.

Engine speed	1/min	5200	5150	5100	5050	5000	4900	4800	4700	4600	4500	4400
Propeller blade angle	°	25°	24°	23°	22,5°	21,9°	21,5°	21°	20,5°	20°	19,5°	19°
Fuel consumption	l/h	18	17,2	16,8	16,5	16,3	15,9	15,5	15,2	14,9	14,5	13,9
Airspeed IAS	km/h	250	245	242	240	238	235	232	230	228	225	220
Endurance	h	6,6	6,9	7,1	7,2	7,3	7,5	7,7	7,8	8,0	8,2	8,6
Max. range	km	1666	1700	1721	1736	1750	1773	1795	1811	1827	1851	1893

The table is valid for:

Flight altitude1000 m MSA , take-off performance 73,5 kW, the total usable quantity of fuel in the tanks is 120 litres.

5.3.3 Balked landing climb

The data is valid for maximum landing weight 472,5 kg , wing flaps position 35°. Engine ROTAX 912 S2, engine speed 5500 r.p.m, Propeller SR 2000 D

Flight altitude (m)	Airspeed IAS km/h	Rate of climb m/s
0	115	4,7
1000	115	4,2
2000	115	3,6

5.3.4 Take-off measurements

The data is valid for following conditions: H = 0 m MSL, Temperature t = 15 ° C Wing flaps position 15° and engine ROTAX 912 S2

Surface of the runway	Take-off run distance (m)	Take-off distance up to 15m (m)
Non paved - grass	86	264

5.3.5 Effect on flight performance and characteristics

No disturbing effects on flight performance and characteristic of the aeroplane WT-9 Dynamic Club S were recorded during the flight tests.

5.3.4 Demonstrated crosswind performance

The maximum demonstrated crosswind speed for take-off and landing is 6 m/s according to the airworthiness requirements.

5.3.5 Noise data

The maximum noise data 56,7 dB (A) was measured during the flight tests according to the German noise requirement LS – UL 96.

SECTION 6

WEIGHT AND BALANCE / EQUIPMENT LIST

6.1 Introduction

This section contains the payload range with which the aircraft may be safely operated. C.G. position is very important parameter which effects the safety of flight.

6.2 Weighing procedure

To define the airplane C.G. it is necessary to weigh the empty airplane with standard and optional equipment, with operating fluids of the engine but without the fuel in the tanks.
The airplane is weighed with the help of three weighing-machines located below the left and right main wheels and below the nose wheel. The airplane position for weighing has to be parallel with the horizontal plane which passes through the side edge of the cockpit. The reference point (datum point = DP) is leading edge of wing root section. To measure the distance from centre of main landing wheel axle and of nose wheel axle to reference point DP. C.G. position is calculated from the reference point DP (leading edge) and C.G. position is calculated in % aerodynamic mean chord (MAC) too. The leading edge of the MAC is located in distance 77 mm rear from DP.
Centre of gravity position after loading airplane (crew, fuel, baggage or additional equipment) is calculated as following: The sum moments of airplane all components mass is added to the total moment of the empty airplane and divided by total weight.

6.3 Weight and balance record and permitted payload range

Permitted crew + passenger weight with											
Date	Empty weight (kg)	Empty moment (kgmm)	C.G. Position (%)	Max. baggage 10 kg		Half baggage 5 kg		No baggage		Approved	
				Maximum (kg)	Minimum (kg)	Maximum (kg)	Minimum (kg)	Maximum (kg)	Minimum (kg)	Date	Signed
17.03.10	309,0	67262,0	11,9 %	225,96	67,13	230,96	76,81	235,96	86,49		

Condition: Aircraft in the range from maximum fuel of 100,5 litres to minimum fuel of 7 litres.

WEIGHT AND BALANCE RECORD

WT9 Dynamic LSA Club S	Registration: SE-	S/N :DY – 361/2010 LSA

(Empty weight including the operating fluids of the engine and standard equipment).

Datum point (DP): leading edge of wing root section

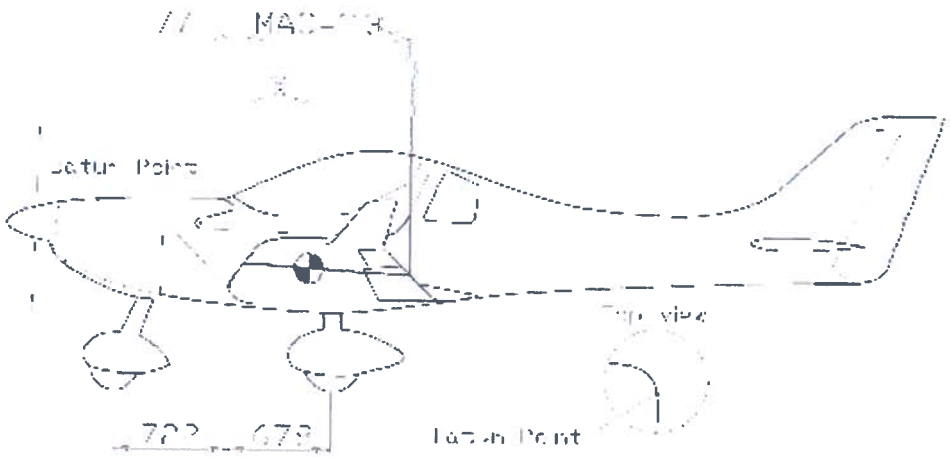

		Weight (kg)	Distant from DP (mm)	Moment M= G * Distant
Empty airplane				
Empty Weight	**G=**	**309,0 kg**	**Empty Moment**	**M = 67262,0 kgmm**
Crew	Gcrew =	kg	720 mm	kgmm
Fuel	Gfuel =	kg	240 mm	kgmm
Baggage	Gbag =	kg	1100 mm	kgmm
Total weight	**G_T =**	kg	**Total Moment**	**M_T =** kgmm

Calculation of the C.G. position from DP in flight (in mm):

$X = M_T/G_T$ = ——— = mm

Calculation of the C.G. position in flight (in % MAC): (MAC= 1185 mm)

$$X_T = (X - 77)/\,MAC \times 100 = \frac{X - 77}{1185} \times 100 = \quad \%\,MAC$$

Permitted position of C.G. in flight is 20 ÷ 30% MAC

Calculated position of C.G. in Flight is within an permitted range: ☐yes ☐no

Place of weighing:

Date: .....Signature.....

6.4 Master minimum equipment list

The following minimum instrument equipment is requested:

Flight and navigation instruments:

- Airspeed indicator – with the Airspeed indicator markings in accordance with item 2.3, Section 2 of this Manual
- Sensitive Barometric Altimeter
- Magnetic compass

Powerplant instruments :

- Ignition Switch
- Fuel indicator
- Tachometer
- Oil temperature indicator and Oil pressure indicator
- Coolant temperature indicator

Additional equipment :

- Master Switch of the electrical system with fuses
- Battery – located in front of the firewall.
- Safety harness – 4 point static harness restrain system is attached to the fuselage structure
- Limitation placards - in accordance with item 2.16, Section 2 of this Manual

CAUTION

If additional equipment is mounted within the magnetic field of the compass, it may affect the readings of the compass.

SECTION 7

AIRCRAFT AND SYSTEM DESCRIPTION

7.1 Introduction

This section provides a description of the operation of the airplane and its systems. Refer to Section 9, Supplements, for details of optional systems and equipment.

7.2 Airframe

WT9 Dynamic LSA Club S is a single engine aircraft, controlled aerodynamically, made from advanced composite material, low-wing monoplane with two side-by side seats. The airplane is equipped with a fixed tricycle undercarriage.

Fuselage

The fuselage sandwich shell is divided in the symmetry plane. The shell is of three layer construction. The external and internal shell layers are made of glass and carbon fibre fabrics, which are saturated with a resin. Between them there is a filling of hard foam panels. The fin is made together with the fuselage. The wing central panel is fixed at the fuselage.

There are two places in the cockpit, side by side type. The interior width is 1.15 m. A lifting cockpit canopy hinges forward. The canopy opening system is assisted by an air strut. The wing central panel with span 2.45 m is fixed at the fuselage. There is an integral tank in the forward box of the wing central panel.

Wing

The tapered wing is a monospar construction with a rear auxiliary spar for the aileron and flap attachments. The main spar caps are made from carbon rovings. The slotted flaps are rectangular sandwich construction. The flap is attached to the wing with four hinges. The aileron is attached to the upper surface of the wing with three hinges. The spars of right and left wings are joined to the wing central panel spar with the help of two pins. The third connecting point is the pin in the rear auxiliary spar. An aileron control system consists of duraluminium rods. The control handle of flaps is attached to the pedestal in the cockpit. The movement by help of the rods and the bellcranks is transmitted to the flap shaft in the wing, next the movement from the shaft is transmitted to the flaps. Optional right wing fuel tank is integral part of wing structure. It is connected with central section tanks with simple house connection and tighted with clamp.

Horizontal tail unit

The horizontal tail unit consists of a stabilizer and elevator. The stabilizer consists of sandwich shells from advanced composite material. The stabilizer is fixed at the fin. The width of the horizontal tail unit is 2.4 m, (the same width as the wing central panel) and allows the transport of the fuselage with regular truck.
The elevator consists of two parts, which are joined together by help of the elevator control.

Vertical tail unit

The vertical tail unit consists of the fin and rudder and has trapezoidal shape. The rudder consists of a sandwich shell from advanced composite material with the control-surface weight balance. The rudder is attached by three hinges at the fin.

7.3 Flight controls

The aircraft has dual controls with two control sticks. The ailerons are controlled by control sticks, connecting rods and arms.
The elevator is controlled by control sticks, connecting rods. The rudder is controlled by cables attached at the rudder pedals and guided alongside the fuselage sides to the rudder. The rudder pedals position is adjustable (see Maintenance Manual, Directional control system, page 1-22)

The wing flaps are controlled by a flap control lever located on the pedestal between the seats. The lever has four positions: retracted, take-off with flap deflection 15°, landing position with flap deflection 24 ° and landing position with flap deflection 35°. The flap position is locked by a plate at the flap control lever in the appropriate position. Movement with help of rods and bellcranks is transmitted onto the coaxial shaft and from the shaft is transmitted onto the flaps with help of the rod.

7.4 Instrument panel

The standard instrument panel arrangement is shown in the following figure (fig.9). A different instrument panel arrangement may be used, if optional flight and navigation instruments are mounted in the airplane.

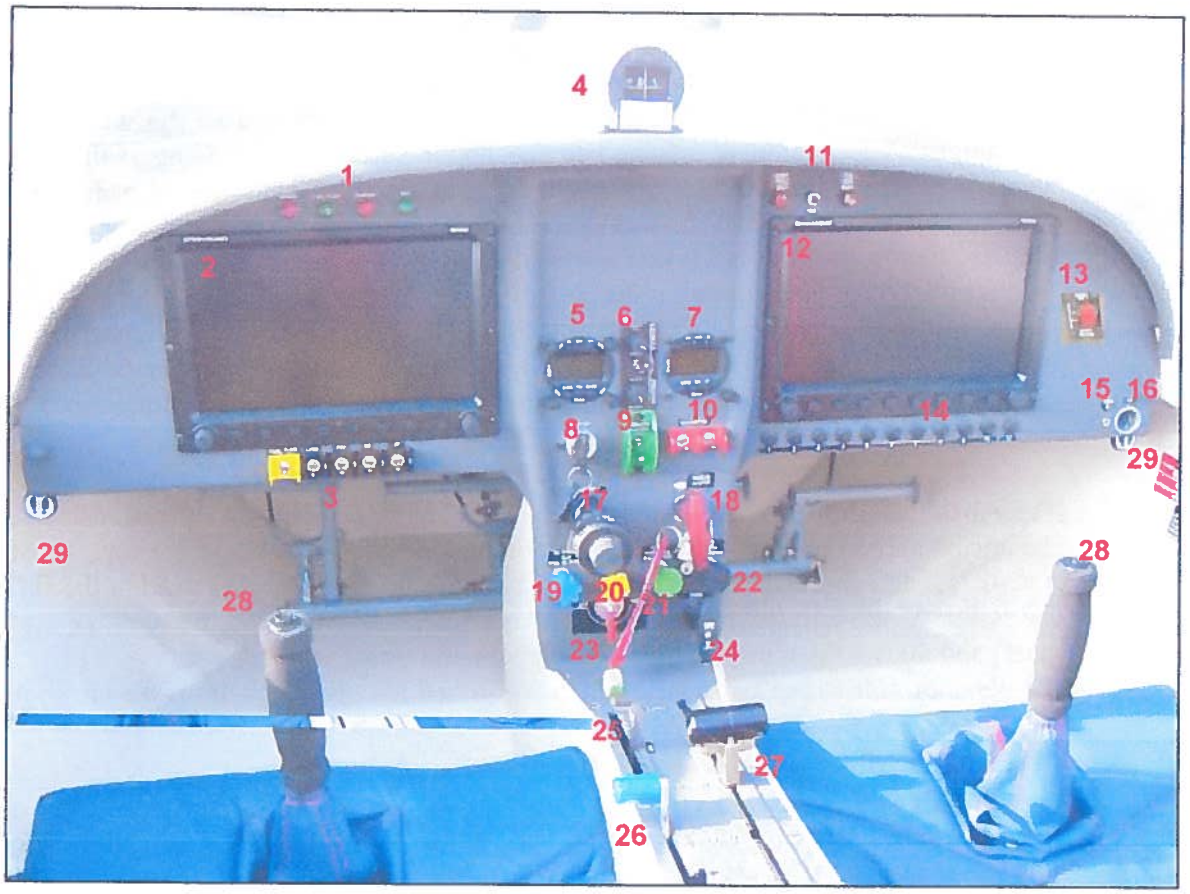

Fig. 9. Instrument panel

1. Control lights:EMS warning, Fuel Pump, Charge, Net
2. EFIS D-1000
3. Switches:Fuel pump, Landing lights, Navigation lights, ELT, AP
4. Magnetic Compass
5. Radio
6. Intercom
7. Transponder
8. Strarter key
9. Master Switch
10. Ignition
11. Reserve indicator
12. EMS D-1000
13. ELT
14. Circuit-breakers*
15. Audio jack in
16. 12 V Stage Socket
17. Throttle Lever
18. Rescue system lever
19. Oil Cooler Flap Lever
20. Carburettor preheating Control
21. Cabin venting
22. Cabin heating
23. Fuel selector
24. Choke Lever
25. Trim Control Lever
26. Wheel Brake Lever
27. Flap Control Lever
28. PTT button
29. Pedals adjustment

* see next page

Circuit-breakers:

1.	2A Fuel Pump
2.	10A Landing Lights
3.	2A Navigation Lights
4.	1A ELT
5.	8A EFIS D-1000
6.	3A Autopilot
7.	8A EMS D-1000
8.	4A Radio

9.	2A Transponder
10.	1A Fuel Reserve
11.	10A Socket 12V

7.5 Landing gear system

The main wheels of the model Club S are mounted on spring legs, which are attached to the left and to the right outside of the wing central panel. The nose wheel leg is attached at the fire wall. The nose wheel is sprung by help of rubber components and is controlled with the rudder pedals. The main wheels on both legs are equipped with hydraulic disc brakes and spats.

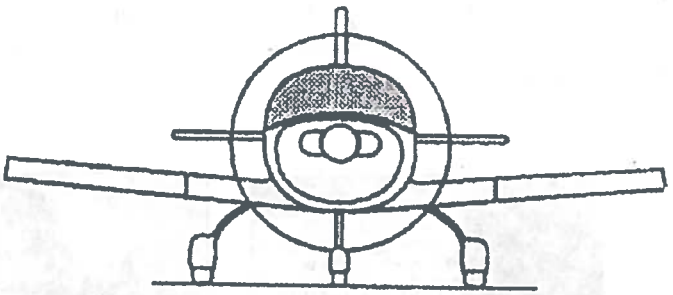

Fig.. Fixed undercarriage

7.6 Seats and safety harness

The plane has two side-by-side seats which are fixed, unadjustable. The back support of the seats is glued into the fuselage construction as the frame. The safety belts – 4 point static harness restraint system is attached to the left and right seat side panel and to the strut behind the back support of the seats.

7.7 Baggage compartment

The baggage compartment is situated behind the seats. Maximum baggage weight is stated on a placard near the compartment. Hard objects may not be carried in the baggage compartment without a suitably designed lashing or anchorage.

7.8 Doors, windows and exits

The cockpit canopy consists of one part. The Perspex canopy is glued on the composite frame. The canopy is attached to the nose section of the fuselage by pins which make it possible for the canopy to be tilted forward. For easier manipulation, the weight of the canopy is counterbalanced by two gas struts which allow it to open effortlessly. On the lower frame there are handles outside the canopy. The canopy is equipped with a lock on the upper rear section of the frame (see Fig.12) and the red ring on lock pin as the correct cockpit canopy locking indicator.

CORRECT cockpit canopy latching (2) and locking (1)

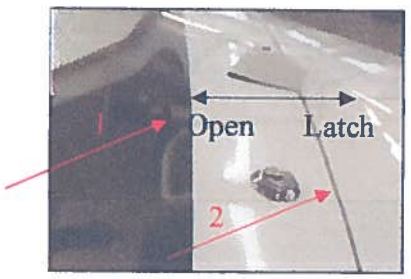

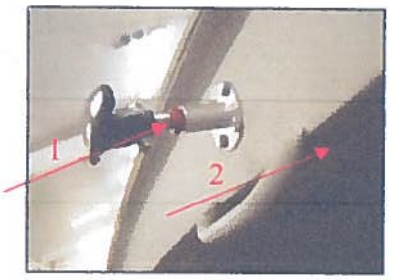

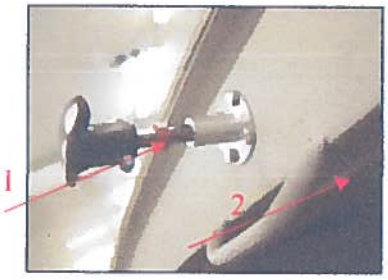

Cockpit canopy latched (2) but unlocked (1) – **WRONG !**

Cockpit canopy latched but partially locked- **WRONG!**

Cockpit canopy unlatched and apparently locked - **WRONG!**

Fig.12 Cockpit canopy latching and locking

7.9 Powerplant

Powerplant consists of 4 cylinder horizontally opposed, 4-stroke engine ROTAX 912 ULS with power 73 kW and a three blade on ground adjustable aircraft propeller. This engine is suitable for aircraft, but it must never fly at locations, airspeeds, altitudes, or in any other circumstances from which a successful no-power landing cannot be made, after sudden engine stoppage.

Description

ROTAX 912 ULS is 4-stroke, 4 cylinders horizontally opposed, spark ignition engine, one central camshaft-push-rods-OHV. Liquid cooled cylinder heads, ram air cooled cylinders. Dry sump forced lubrication. The engine is fitted with electric starter, AC generator, mechanical fuel pump and the reduction gear with integrated shock absorber. Refer to the Operator's Manual for all versions of ROTAX 912 ULS for more details about versions difference.

WARNING

Due to carburettors, flights in icing conditions are prohibited.

The cooling system of the engine is designed for liquid cooling of the cylinder heads and ram-air cooling of the cylinders. As coolant for the cooling system 50 % antifreeze concentrate with additives against corrosion and 50 % pure water is used. The coolant must be renewed every two years. Refer to the Operator's Manual for ROTAX 912 ULS.

The periodic inspections are structured on 25, 100 and 200 hours check which must be performed according to the maintenance schedule. The 50 hour check is recommended by the manufacturer but not mandatory, with the exception of oil change. Additionally, a check after the first 25 hours of operation must be performed.

There are two laminated cowlings (upper and lower) which cover the engine suspended at the engine bed. The disassembly and assembly of the upper cowling is easy – just release the quick-closing locks. The upper cowling is usually removed during engine pre-flight inspection to check the engine compartment, operating fluids quantity (oil, coolant) and to check engine installation.

After removing the upper cowling of the engine, check the following:

1. Oil quantity check: Remove the cover of the oil tank (3). The oil level in the oil tank should be between two marks (max./min.) on the dip-stick, but must never fall below the min. mark.
2. Coolant quantity check: Remove the cover of the expansion tank (7). The coolant level in the overflow bottle should be between min. and max. mark.

The lower cowling is removed after unscrewing the attachment screws connecting the cooler to the cowling face side, then unscrew the attachment screws connecting the cowling to the firewall border.

Propeller

DUC Swirl is the three blades, on ground adjustable propeller with diameter 1.7 m of mixed structure.

Intentionally left blank

Intentionally left blank

Fig. 13 Powerplant ROTAX 912 ULS

1 – Coolant filler tank
2 – Regulator
3 – Oil tank
4 – Air box
5 – Carburettors
6 – Ignition
7 – Coolant overflow bottle
8 – Cabin venting and engine intake
9 – Oil radiator

7.10 Fuel system

The fuel tanks are located in the forward box of the wing central panel. An auxiliary tank is installed in the right wing. The fuel system scheme is shown at fig.14.
The fuel is fed from the fuel tank into the fuel selector located inside the cockpit below the instrument panel, then through the fuel filter into the engine fuel pump into the carburettor. The unconsumed fuel is supplied back through return piping into the left tank. The vent pipe is outgoing from the upper part of the fuel tank, proceeds along the fire wall and the vent opening is located at a lower surface of the fuselage behind the fire wall. The electrical fuel indicator switch allows the indication of the fuel quantity in the left or the right fuel tank. Red light annunciator above the fuel indicator will be illuminated when 7 litres of fuel remain in each fuel tank.

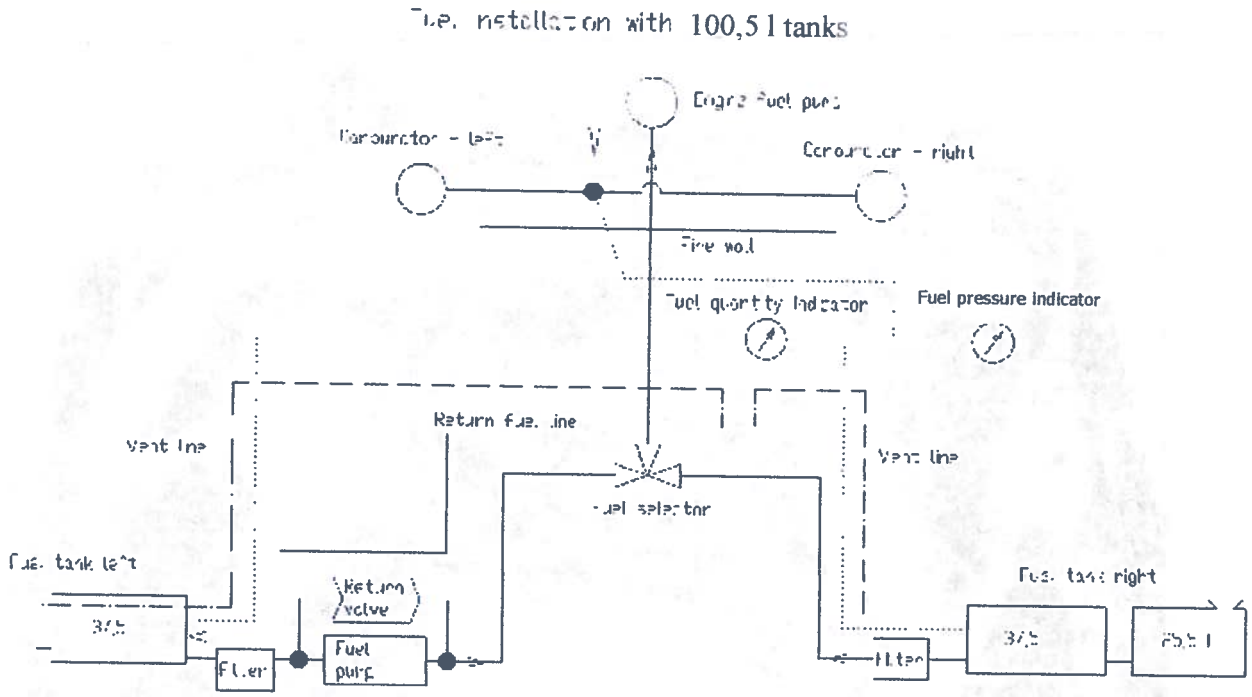

Fig. 14 The fuel system scheme

On the WT9 Dynamic LSA Club S aircraft the left tank is considered the main tank as the electric fuel pump operates on this tank and the excess fuel is also returned there.

The left tank must be used for all take offs and landings. When you are flying with full tanks, use the left tank for 30 – 40 minutes before changing to the right tank. This allows space for the return of excess fuel without venting it overboard.
Monitor the fuel quantity when you are doing long flights or flights with low fuel quantity. To maximize range/endurance when the red annunciator lights flash (7 litters each tank), the following procedure is recommended. Select the right tank and use this tank until all the fuel is exhausted. Change back to the left tank should now have slightly more than 7 litres (around 20 minutes flying depending on power settings) because of the return fuel. Continue flight and landing procedure with the electric fuel pump on, as is written in this manual.

7.11 Electrical system

There are electrical system diagrams in the Maintenance Manual for the airplane WT9 Dynamic LSA Club S. The wiring system depends on instrumentation and other electric equipment of an individual airplane according to a customer's desire. The dual engine ignition is a separate part of the electric system. Each of two ignition circuits has its own break switch. The detailed description of the ignition and the AC generator is listed at the Operator's Manual for ROTAX 912 engine.

7.12 Pitot and static pressure system

The Pitot tube for the airsped indicator is located on the right wing leading edge. Pressure distribution to individual instruments in the cockpit is done through flexible plastic hoses. The static pressure receivers are located on the both sides of the fuselage behind the cockpit. Keep the system clear to assure its right function.

7.13 Avionics

The following avionics are mounted in the airplane: radios and intercom. This equipment must be connected with the headphones and with the antenna. The airplane might be equipped with other instruments such as GPS, transponder, board computer.... These flight and navigation instruments are mounted as an option of the customer. (See Chapter 9.1 List of inserted supplements) For right operation of the instruments and for more details refer to the Manuals supplied with above mentioned instruments

7.14 Miscellaneous equipment

Rescue system Magnum 601 is mounted as miscellaneous equipment of the airplane WT9 Dynamic LSA Club S. (for operation see Operation manual delivered by producer of equipment)

SECTION 8

AIRCRAFT HANDLING, SERVICING AND MAINTENANCE

8.1 Introduction

This section contains factory recommended procedures for proper ground handling and servicing of the airplane. It also identifies certain inspection and maintenance requirements which must be followed if the airplane is to retain that new-plane performance and dependability. It is wise to follow a planned schedule of lubrication and preventive maintenance based on climatic and flying conditions encountered.

The airframe surfaces should be protected with light plastic foil or cloth cover against dust. All engine intakes, vents, the fuel vents and pitot static system should be covered before long term airplane parking or storing, due to contamination by foreign objects (insects, birds).

The external surfaces of the airplane should be washed with a sufficient quantity of the water and an adequate quantity of detergent. Do not apply petrol or chemical solvents for cleaning the external surfaces of the airplane.

It is advisable to park the airplane inside a hangar or eventually inside other weather-proof space with stable temperature, good ventilation, low humidity and dust-free environment. The parking place should be protected against possible damage caused by sun radiation, humidity and wind. Sunbeams reflected through the canopy can magnified and may cause spot heating, which can create damage to the cockpit area and the upholstery.

8.2 Airplane inspection periods

8.2.1 Powerplant

The engine periodic inspections and maintenance are conducted according to the procedures contained in the Maintenance Manual for ROTAX Engine Type 912 ULS Series.

Daily inspection – is carried out in accordance with the instruction for execution of the preflight inspection, which are contained in Section 4, item 4.4.

Check after 25 hr. of operation – must be carried out according to the Maintenance Manual for ROTAX Engine Type 912 ULS Series.

Check after 50 hr. of operation – must be carried out according to the Maintenance Manual for ROTAX Engine Type 912 ULS Series

100 hr. check – must be performed according to the Maintenance Manual for ROTAX Engine Type 912 ULS Serie every 100 hr. of operation or 1 year, whichever comes first. The renewal of the spark plugs, the fuel filter and the coolant are carried out after 200 hr. of operation.

TBO (Time Between Overhaul) – 1500 hours

Oil change

must be performed according to the Maintenance Manual for ROTAX Engine Type 912 ULS Series. There is an oil drain screw on the bottom of the oil tank. There is an oil filter at the left side beside the propeller gearbox. At every oil change, replace the oil filter and open the old one with special tool, to ensure the engine is not producing chips. Remove filter insert, cut top and bottom cover off the mat. remove filter mat, unroll and check it for metal chips, foreign matter, contamination and abrasion. This check is important as it allows conclusions regarding the condition of the engine and gives information about a possible cause of any failure.

8.2.2. Propeller

The propeller in operation does not require any special maintenance. In case of propeller contamination wash its surface with a piece of cloth dipped in warm water with addition of the usual detergent. The operator is allowed carry out repairs to common little nicks on the leading edges, up to a maximum size of 4 mm. This repair can be done by using Epoxy resin with filler. The damaged place is to be degreased and fill with resin. After hardening the resin the repaired area is to be sanded and protected with enamel or varnish of the epoxy or polyurethane type. Replace the parts supplied by producer and remove the cone from the propeller. Any other dismantling is forbidden. The repair of large demage must be carried out by the manufacturer or by an authorised service centre. Operator's Manual of the aircraft propeller DUC Swirl includes additional information about maintenance.

Period to overhaul (TBO) is – 800 hours of operation

8.2.3 Airframe

Daily inspection - is carried out in accordance with the instructions for the execution of the preflight inspection, which are contained in Section 4, item 4.4.

Check after 25 hr. of operation – must be performed according to the Maintenance Manual for the WT-9 Dynamic Speed S after the first 25 ± 2 hr. operation together with the engine check. The scope of this check is same as the check after 50 hr. of operation.

Check after the 50 hr. of operation – must be performed according to the Maintenance Manual for the WT-9 Dynamic Speed S after the first 50 ± 3 hr. operation together with the engine check. The scope of this check is same as the check after 25 hr. of operation. The folowing work should be carried out:

1. **Retractable undercarriage**: Check the leg attachment into the wing central panel and into the fuselage. Check the control of the nose wheel, the brakes, the tyres.
2. **Outside surface check**, check all control surface shafts, the rods, the articulated joints, the hinges, the control cables, the auxiliary tail skid. Sparingly lubricate the control service hinges. Thoroughly clean and lubricate the piston rod of the canopy gas struts.
3. **Check the control cable guides**, lubricate the roller-bearings of the elevator control rod.
4. **Check charging** – charge battery if need be, cleaning.
5. **Power plant** – visually check the hoses for condition, damage, leaks, attachment and security, the rubber flange of the air filter for cracks. Visually check exhaust system for condition, cracks, deformation or damage. Lubricate the bowden cable for throttle and starting carburettor (choke) (see the Maintenance Manual for ROTAX Engine Type 912 S2 Serie).
6. **Check the brake fluid level** in the main hydraulic face ram, which is located beyond the seats. Check the brakes for operation.
7. **Control surfaces deflections** – to check the control surfaces deflections see Control Surfaces Deflections Record, which is contained in the Maintenance Manual for ultralight aeroplane WT-9 Dynamic Speed S.

100 hr. check - must be performed every 100 hr. of operation or 1 year, whichever comes first. This inspection must be performed by qualified staff. The scope of this inspection is the same as the check after 50 hr. of operation covering the following work:

1. Full cleaning of the aeroplane
2. Check aeroplane surfaces for mechanical damage and cracks
3. Pay special attention to:
   - Undercarriage and its attachment into the wing central panel
   - Wing-fuselage connection reliability, clearances, spar ends state
   - Engine bed, welded areas, rubber engine mounts, security of attachment bolts: engine-engine bed, engine bed-firewall

4. Visually check condition and integrity of wires, check charging – charge battery, function of the signal bulbs, function of the fuel quantity indicator, fuel drains and fuel vents for blockages, fuel filters.
5. Visually check condition of the instruments and the avionics (connector, a plug) and for correct operation
6. Lubricate according to the Lubrication Chart
7. Check tyres for condition, cuts, uneven or excessive wear and slippage – replace if need be.

Lubrication Chart

The manufacturer recommends using grease and oil without acid for lubrication only. Apply the lubricants sparingly without contaminatig of the airframe.

- Check condition of the bearings of the main wheels – clean and lubricate if need be, at least every 2 years.
- Check condition of the bearings of the nose wheel – clean and lubricate if need be, at least twice per year.

Lubricate: Main and rear spar pins
The axle of the nose wheel leg
Guid tube of the flap control lever
The pins of the nose undercarriage leg, the leg support struts

Sparingly lubricate: The hinges of the control surfaces, movable parts of the control surfaces, bearings of the ailerons, the pedals and the brake control lever, all control cables at inlet into the terminations (in engine compartment).

Battery

The powerplant is equipped with an AC generator, which recharges the battery in the flight. The Gel -Electrolyte 17 Ah maintenance-free battery is dry and hermetized; it doesn't release any toxic or explosive gas The battery needs a visual check of the attachment and security, and inspection for leakage of the electrolyte. The electrolyte contains mordant vitriol acid, which may cause damage to the airframe and equipment.

8.3 Airplane alterations or repairs

It is essential that the responsible airworthiness authority be contacted prior to any alterations on the airplane to ensure that the airworthiness of the airplane is not violated. For repairs refer to the applicable Maintenance Manual. The operator is allowed replace parts supplied by the producer only. The repairs to damaged skin must be carried out by qualified staff in accordance with approved procedures.

WARNING
After airplane repairs, repainting or mounting of additional instruments or equipment it is necessary to check weights and positions of C.G.

8.4 Ground handling / Road transport

The airplanes can suffer higher stress loads on the ground than in the air. In this case can result a potential menace of the safety, as the airplane construction is designed for the manoeuvring load. The high aircraft normal accelerations are occurred at the hard landing, during the taxying at the rough surface and during the driving at the hole road.
Don't use unnecessary transportation in the road.

CAUTION
The airplane is equipped with mooring eyes which are screwed into the threaded hubs on the wing lower surface located approx. half way along the wing. It is also necessary to moor the nose wheel landing gear.

CAUTION
Push or pull the airplane from the propeller root only, never at the wing tips or the control surfaces.

8.5 Cleaning and care

Regular cleaning and care of the powerplant, propeller, wings and the airframe is the first consideration for safe and efficient operation. Cleaning and care should be based on climatic and flying conditions. The exterior painted surfaces should be cleaned with clear water using a sponge or soft cotton towel and chamois. These surfaces should also be protected with a silicone free hard wax reapplied at least once a year by hand or with a rotating cloth disc.
Clean the Plexiglas canopy only as necessary using a soft cotton towel and clear water mixed with a small amount of mild detergent. Protect the canopy with anti-static cleaning agents which are made specifically for Plexiglas.

CAUTION
Do not clean the canopy with alcohol, acetone or lacquer thinner, because the canopy is made from acrylic. Acrylic becomes fragile after contact with these liquids.

8.6 Winter operation

The cooling system of the cylinder heads is filled with a mixture of anti-freeze and water, which protects the cooling system against freezing up to – 38 ° C. Check coolant with densimeter or glycol tester before winter operation and to prevent the failure of the radiator or cooling system due ice.

If the temperature is below this value, the coolant must be drained or renewed with pure anti-freeze liquid. The coolant must be renewed every two years. Use only coolant according to the current Operator's Manual for engine ROTAX 912 ULS.

If low cylinder head or oil temperatures occur during operation under low outside temperature, then the following is recommended:

Cover a part of radiator face by a duralumin sheet or drawing paper of appropriate dimensions, insert it between the radiator and the bottom engine cowling.

Cover the oil cooler face or a part of the face only, by a duralumin sheet or drawing paper attached with a suitable adhesive tape (or bend the oil cooler with that tape) and lag the oil tank.

CAUTION
The temperature limits of the coolant, cylinder heads and oil must be checked after these arrangements.

If the airplane has a fixed undercarriage with wheel spats fitted it is recomended that these should be removed during winter operations on frozen or rough ground to minimize damage to the spats.

I winter operation is advisable to disconnect the ventilation intake hose (VIH) due the better performance of heating system. After disconnecting the ventilation intake hose close the socket for the hose. Othervise the ram air will be loosen by this opening.

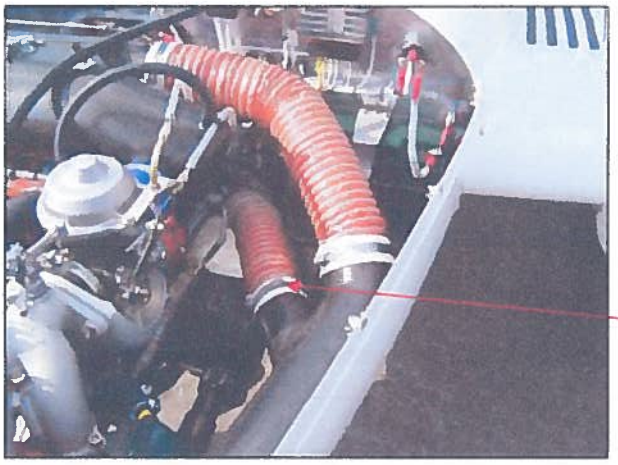

VIH

SECTION 9

SUPPLEMENTS

9.1 Introduction

This section contains the appropriate supplements necessary to safely and efficiently operate the airplane when equipped with various optional systems and equipment not provided with the standard airplane.

NOTE
Additional individual equipment in accordance with a customer's request will increase the airplane empty weight and reduce the allowed useful load.

9.2 List of inserted supplements

Date	Doc. No.	Title of the inserted supplement
05.02.2010		2x Dynon SkyView D-1000 Radio Funkwerk ATR 833 Transponder Funkwerk TRT 800 H Intercom PS 3000 Safety system Magnum 601 ELT Ameriking AK-451

9.3 Supplements inserted

For operation and handling with inserted supplements see corresponding Operation manual.